ISSN 2395-1621

Design & modal analysis of planetary gearbox casing

#1Sachin S. Pawar, #2Amol B. Gaikwad

1Sachinpawar217@gmail.com
2Amol24gaikwad@gmail.com

#12Department of Mechanical Engineering
Dr. D.Y.Patil School of Engineering, Lohegaon, Pune, India

ABSTRACT

Mill drives and transmission of its power to mills is an important area of the sugar factory in respect of investment and maintenance cost and energy saving. Power developed by the prime movers is required to be transmitted to the mills at even less speed. Therefore, a set of high speed and slow motor gear trains is used to achieve the eventual operating speed and the power requirement at the mill. Sugar industry is now entered in a new era where efficient and compact drives are replacing the conventional system with successful results either in terms of power saving and in terms of extraction.

The conventional system is replacing by planetary drive system. So in this paper I am going to design planetary gearbox casing for sugar mill Application.

The casing of gearbox is an important component in planetary gearbox. Gearbox casing encloses the assembly of gears, shafts and bearings. Casing provides accurate alignment of the components. It also provides strength and rigidity to maintain alignment of rotating components during gearbox running. Thus the function of gearbox casing is to accommodate and support power train. Since the gearbox application is for very high load, failure of casing may lead to major damage of the sugar mill. Analysis of gearbox casing is very essential in order to decide appropriate dimensions and to predict the behavior of casing under different operating conditions. For such requirement analysis of casing is done in present paper.

Keywords— **Gear design, planetary gear train, KISsys & KISSsoft, Modal analysis.**

ARTICLE INFO

Article History

Received :18th November 2015

Received in revised form :

19th November 2015

Accepted : 21st November , 2015

Published online :

22nd November 2015

I.INTRODUCTION

This paper outlines the design of the gearbox using gear design software KISsys & KISSsoft, Creo-2.0.KISsys & KISSsoft used to design gear train consist of selection gear parameters. Creo-2.0 used for 3D modeling of gearbox components e.g. casing.The gearbox has been designed using the AGMA standards.

Finite Element Analysis (FEA) has done to predict the vibration level of gearbox. The aim of this paper is to apply ANSYS software to determinethe natural vibration modes for gearbox casing. This analysis is to find the natural frequency gearbox casing in order toprevent resonance for gearbox casing. From the result, thisanalysis can show the range of the frequency that is suitable forgearbox casing which can prevent maximum amplitude.

Excitation Forces:-

The excitation force can be divided into three types.

1. Mechanical looseness and unbalance at running speed.
2. Gear tooth meshing.
3. Electrical motor.

II.DESIGN OF GEAR TRAIN USING KISSsys & KISSsoft

KISSsoft is a software package for calculating machine elements. While gears are a natural focal point, owed to

© 2015, IERJ All Rights Reserved

their central role in transmission, the software also covers shafts, bearings, connecting elements, springs, chains/belts and others.
Sizing calculations cover all common gear types: cylindrical gears, bevel gears, worm gears, helical gears, hypoid gears and face gears, for cylindrical gears also as planetary sets and gear racks. In addition to the strength analysisaccording to the respective standards (ISO, AGMA, DIN, VDI, Klingenberg), the program also offers a number of different design and optimization functions and methods exceeding the standards.

covers bevel and hypoid gears, crossed axis helical gears, worm gears and face gears. In addition to the strength analysis according to the respective standards numerous optimization functions are offered. And of course all important geometry calculations are carried out, control measures for the manufacturing are provided and the tooth shape is represented in two and three dimensions.
Using current standards as its basis, KISSsoft serves as an easy and safe tool for verifying the strength of cylindrical gears and offers a number of different methods.
The software calculates resistance to pitting, scoring and breakage at the root of a gear tooth, and, if given a minimum safety factor, can also determine transmittable power and achievable service life.
Geometry calculations provide all relevant dimensions and test measures based on applicable standards and under full consideration of relevant tolerances.
The pre-sizing feature provides a series of suggestions for gear pairs aimed at solving a transmission problem – all at the click of a button. On the one hand, this step provides reasonable ranges for the module, centre distance, face width and number of teeth; on the other hand, the concrete solution also serves as a starting point for further optimization work. For cylindrical gears the fine sizing feature, which combs through entire ranges of parameters and validates solutions based on a variety of criteria,offers a powerful tool to find the optimal solution.
Other design functions are available that target specific parameters such as profile shift, tooth thickness tolerances, helix angle or reference profile; these functions then determine the value of the parameter based on pertinent criteria.
CAD interfaces allow the user to represent a gear in two-dimensional format as a DXF or IGES file or as a three-dimensional STEP or IGES model. Various levels of integration are also available for the CAD programs typically used in mechanical engineering; this integration option makes it possible to construct a 3D model automatically in the CAD program.

III.OBJECTIVE

Deciding the gear parameters by conventional method is complex and time consuming. Instead of conventional method if we use gear design software it will be easy to find the gear parameters. Objective of this software to decide gear parameters like module, number of teeth, centre distance, different component speed. To find the Gear Mesh Frequency output of software will be very useful.

INPUTS FOR SOFTWARE

Gear train is to be design for below parameters:
Motor/Input power: - 357 kW
Motor/Input speed:-1000 RPM
Reduction ratio: - 200/1
Above gearbox ratio can be achieved in three stages as gearbox ratio is high.

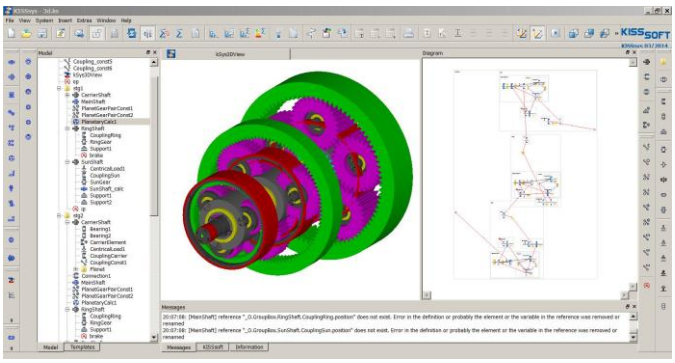

KISSsys Interface

IV.GEAR MESH FREQUENCY (GMF)

This is the frequency most commonly associated with gears and is equal to the number of teeth on the gear multiplied by the actual running speed of its shaft. A typical gearbox will have multiple gears and therefore multiple gear meshing frequencies.
Gear mesh frequency (F) = T* (S/60) Hz
Where,
T= number of teeth on gear
S= speed of the rotating shaft (on which gear was mounted)
Therefore the general expression for fundamental gear meshing frequency and higher harmonics is as follows:
Fn =nT* (S/60) Hz
Where n=1, 2, 3, 4……..corresponding to the harmonics.
From the software KISSsys & KISSsoft we found out gear parameters. We can find Gear Mesh Frequency by using gear parameters. GMF date tabulated below;

© 2015, IERJ All Rights Reserved

		1ST Stage	2ND Stage	3RD Stage
SS	Sun Gear RPM	1000	140.4	22.8
RT	Ring Gear Teeth	98	98	89
PT	Planet Gear Teeth	41	39	31
ST	Sun Gear Teeth	16	19	26
Tvalue	Train value	0.163265	0.193878	0.292135
CS	Carrier RPM	140.4	22.8	5.2
PS	Planet RPM	335.5902	57.29231	14.92903
PSabsolute	Planet RPM Absolute	475.9902	80.09231	20.12903
RS	Ring Gear RPM	0	0	0
PGMF	Planet Gear Meshing Frequency CPM	13759.2	2234.4	462.8
FGMF-Sun	Sun Gear Meshing Frequency CPM	16000	2667.6	592.8
Ratio	Stage Ratio	7.125	6.157895	4.423077

GEAR MESH FREQUENCY (GMF)

CAD MODEL

Below figure gives the pictorial representation of the gearbox casing. The casing is modeled in highend design software Creo 2.0. The importantparametric quantity while designing the gearbox casing is the ribbing which is to be provided in order toattain the required strength, thus analysis happens to bean effective tool in proper design detailing. TheCAD model of gearbox casing specification is Length-1745mm Width- 1675mm Height-1410mm.

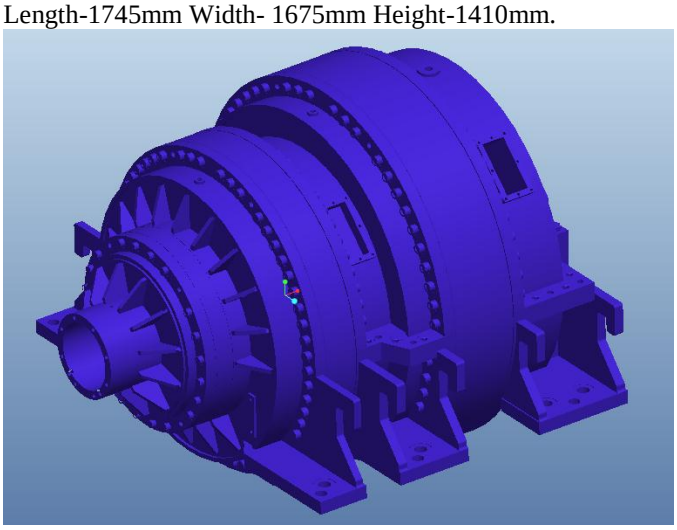

PLANNED WORK

Modal Analysis: The natural frequencies of model in free-free conditions are calculated using Ansys, and by applying the boundary conditions also to compare with operating frequencies.

In order to prevent resonance of the gearbox top cover, it is expected that natural frequency of the gearbox casing should have a minimum separation margin of 20% [11]

Experimentation & Validation

Experimentation would be completed using FFT setup. The resulting digital time record is then mathematically transformed into a frequency spectrum using an algorithm known as the Fast Fourier Transform or FFT. The FFT is simply a clever set of operations which implements Fourier's basic theorem. The resulting spectrum shows thefrequency components of the input signal.

For validation purpose the Natural frequencies obtained from computational method and experimental method would be compare.

V.CONCLUSION

In the present paper more focus will be on vibration analysis of gear housing of planetary gearbox by determining natural frequencies, mode shapes with the help of modal analysis. Furthermore frequency response will be measured at different excitations and the response will be analyzed with the help of FFT.

ACKNOWLEDGMENTS

The corresponding author acknowledges Premium Transmission Ltd., Pune, for sponsoring this project and for support.

In addition, author gives special thanks to Mr. Ashish Pawar, Mr. Amol Kuldharan, of Premium Group and Prof. Makasare P. A., Prof. Patil A. N. of Dr. D.Y.Patil School of Engineering, Lohegaon, for their continuous supportand guidance.

REFERENCES

[1]Hugot E., Handbook of Cane Sugar Technology, Third edition ed.: ELSEVIER SCIENCE PUBLISHING COMPANY INC, 1986.

[2] “Design Manual for Enclosed Epicyclic Gear Drives” AGMA 6123--B06

[Revision of ANSI/AGMA 6023--A88 and ANSI/AGMA 6123--A88]

[3]"Geometry Factors for Determining the Pitting Resistance and Bending Strength of Spur, Helical and Herringbone gear teeth," AGMA INFORMATION SHEET, vol. AGMA 908---B89, April 1989.

[4]"Industrial Gear Lubrication," American Gear Manufacturers Association, vol. ANSI/AGMA 9005--E02, 2002.

[5]Darle W. Dudley, Dudley’s Handbook of Practical Gear Design and Manufacture: CRC Press.

[6]MAAG Gear Design Handbook.

[9]SKF Bearing Selection Handbook.

[10] Shrenik M. Patil, Prof. S.M. Pise, Modal and Stress Analysis of differential Gearbox Casing with Optimization,

© 2015, IERJ All Rights Reserved

International Journal of Engineering Research and Applications (IJERA), Vol.03, ISSUE 6, ISSN: 2248-9622, Nov-Dec 2013, pp. 188-193.
[11] R. V. Nigade Vibration Analysis of Gearbox Top Cover, International Journal of Innovations in Engineering and Technology (IJIET)
[12] M. Sofian D. Hazry K. Saifullah M. Tasyrif K.Salleh I.IshakAutonomous System and Machine Vision Laboratory,School of Mechatronic, Universiti Malaysia Perlis, MalaysiaA study of Vibration Analysis for Gearbox Casing Using Finite Element Analysis, International Conference on Applications and Design in Mechanical Engineering (ICADME)

© 2015, IERJ All Rights Reserved